www.reelschematic.com

300

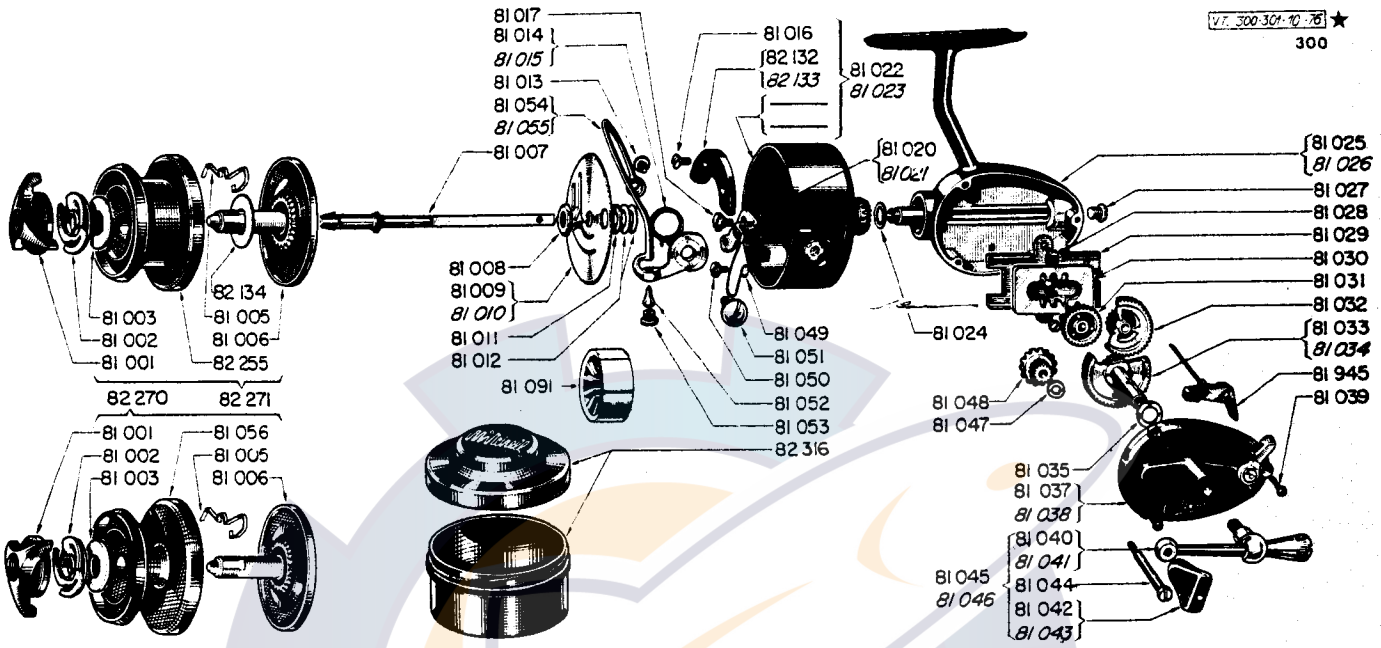

CODE NO.	DESCRIPTION	SUGGESTED RETAIL
81001	Drag Adjusting Knob	.60
81002	Brake Spring	1.05
81003	Teflon Drag Washer	.25
81005	Click Spring	.40
81006	Spindle	2.45
81007	Axle	2.40
81008	Hex Nut	.25
81009	Baffle Plate	.95
81010	Baffle Plate	.95
81011	Baffle Plate Washer	.25
81812	Shims To Adjust Head Baffle Plate	.25
81013	Bail Screw N 2	.45
81014	Bail Spring	.45
81015	Bail Spring	.45
81016	Counterweight Screw	.25
81017	Trip Lever Screw	.25
81020	Trip Lever	.85
81021	Trip Lever	.85
81022	Rotating Head	7.20
81023	Rotating Head	7.20
81024	Shims To Adjust Head Housing	.45
81025	Housing	8.05
81026	Housing	8.05
81027	Lube Port Screw	.25
81028	Oscillation Guide Screw	.25
81029	Oscillation Guide	.95
81030	Oscillation Slide	.95
81031	Pivot Gear	1.10
81032	Transfer Gear	1.10
81033	Drive Gear	5.25
81034	Drive Gear	5.25
81035	Shims To Adjust Gear	.25
*81037	Cover Plate	6.75
*81038	Cover Plate	6.75
81039	Cover Screw	.25

CODE NO.	DESCRIPTION	SUGGESTED RETAIL
*81040	Handle Shank	4.70
*81041	Handle Shank	4.70
81042	Handle Knob	.60
81043	Handle Knob	.60
81044	Handle Knob Screw	.60
*81045	Handle Complete	5.90
81046	Handle Complete	5.90
81047	Shims To Adjust Pinion Gear	.25
81048	Pinion Gear	3.00
81049	Trip Lever Spring	.25
81050	Trip Lever Spring Screw	.25
81051	Bail Screw N 1	.60
81052	Line Guide	1.75
81053	Line Guide Screw	.25
*81054	Bail	6.35
81055	Bail	6.35
*81056	Spool Large	6.50
81091	Spool Arbor	1.00
81945	Anti Reverse Dog	.60
82132	Right Counterweight	.90
82133	Left Counterweight	.90
82134	Fiber Washer	.25
*82255	Spool Small	2.85
*82270	Spool Complete Large Less Container	5.50
*82271	Spool Complete Small Less Container	3.65
82316	Spool Container	1.10

*When present inventory is depleted, this part will be replaced by another number. Please refer to chart in back of book.